VENUS CERAMIC COOKING SYSTEM

The future way of cooking...
is now available

Donnini

MADE IN ITALY

ABOUT US

The Delm Company of Donnini Enzo has been designing and manufacturing professional appliances for the catering industry since 1976. In particular, the firm is specialized in the production and design of glass
ceramic cooking systems.

OUR PHILOSOPHY

“Although it has been a few years, I clearly remember my father telling me about his work by means of brief anecdotes. He used to tell me that “innovative things” may sometimes seem obvious to the uninformed, but it takes research, analysis and a touch of folly to achieve them. I was so fascinated by his words that I have decided to take on the challenge and that is to create an innovative and versatile product that will revolutionize the catering world.”

Denis Donnini

Donnini
Lovato
0

VENUS

Venus is the world's first cooking system certified for professional use to be made from a slab of glass-ceramic material, suitable for indoor and outdoor use. Thanks to the exclusive multiple heating systems with differentiated temperature zones, Venus is able to cook any type of food perfectly and simultaneously, both directly on the cooking surface and using pots and pans, with no specific materials required. Available in gas, lpg/natural gas and electric versions.

The innovative Venus range of cooking systems springs from passion and the desire to provide a practical, futuristic cooking system. The Made in Italy brand is a global quality guarantee. With its specific fine design features, construction materials and patented technologies, Venus aims to deliver the highest standards of excellence worldwide.

The innovative Venus range of cooking systems springs from passion and the desire to provide a practical, futuristic cooking system. The Made in Italy mark is a global quality guarantee. With its specific fine design

UNBEATABLE PERFORMANCES

For large quantities in short times

ENERGY SAVING

Every cooking zone can be used independently

SPACE SAVING

An efficient and versatile cooking system even in a small space

QUALITY COOKING

Optimal cooked food quality guaranteed

PATENTED PRODUCTS - PATENTED DESIGN

Every Venus cooking system, regardless of power type (gas or electric) is complete with EC certification for professional indoor and outdoor use

GAS VERSION

VENUS 1000

3 independent cooking zone
3 independent burner units of 7.6 kW each
TOT 22.8 KW at full power
W. 124 D. 75 H. 42 // W. 114 (without side handles)
85 kg approx.

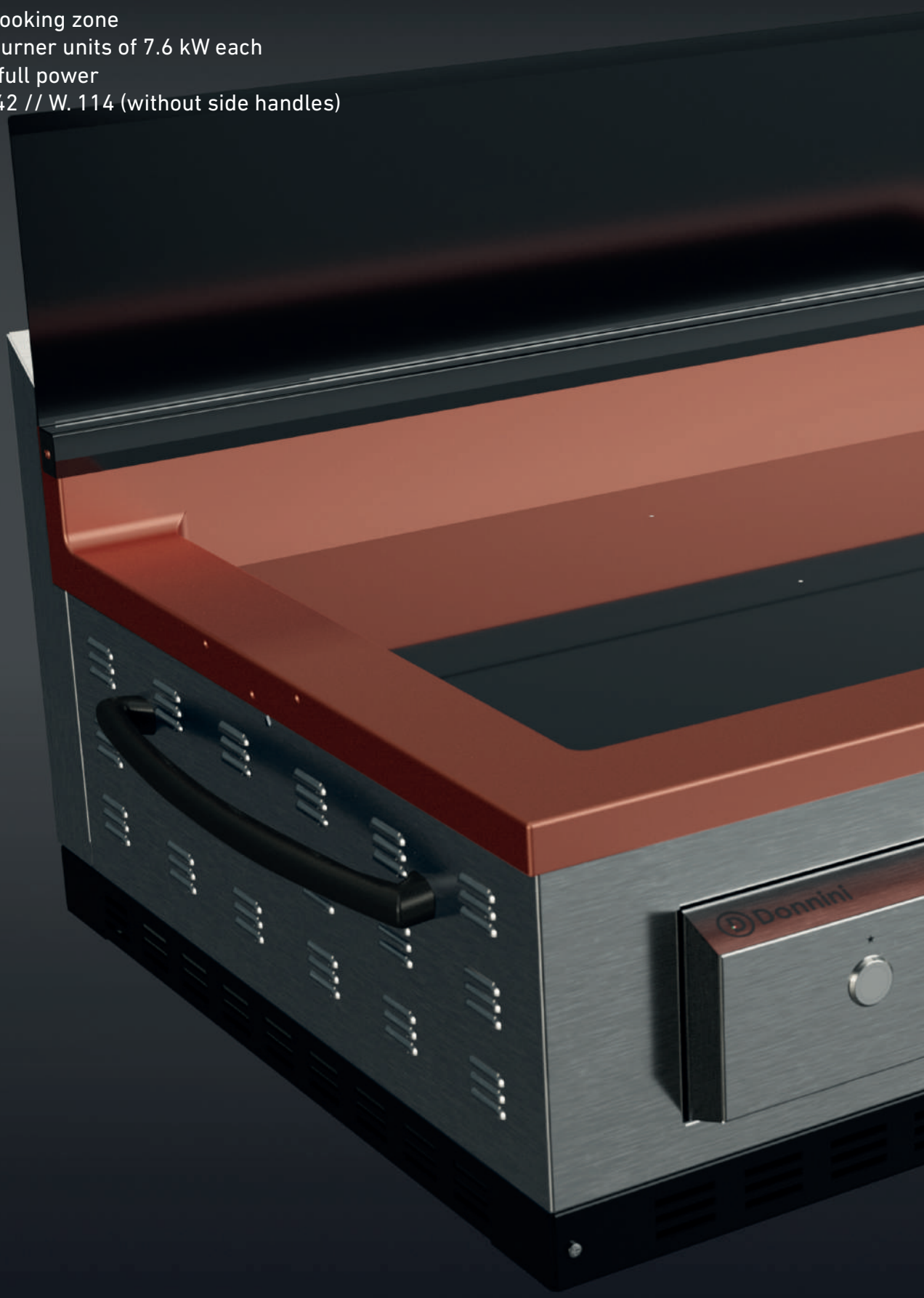

dimensions in millimeters

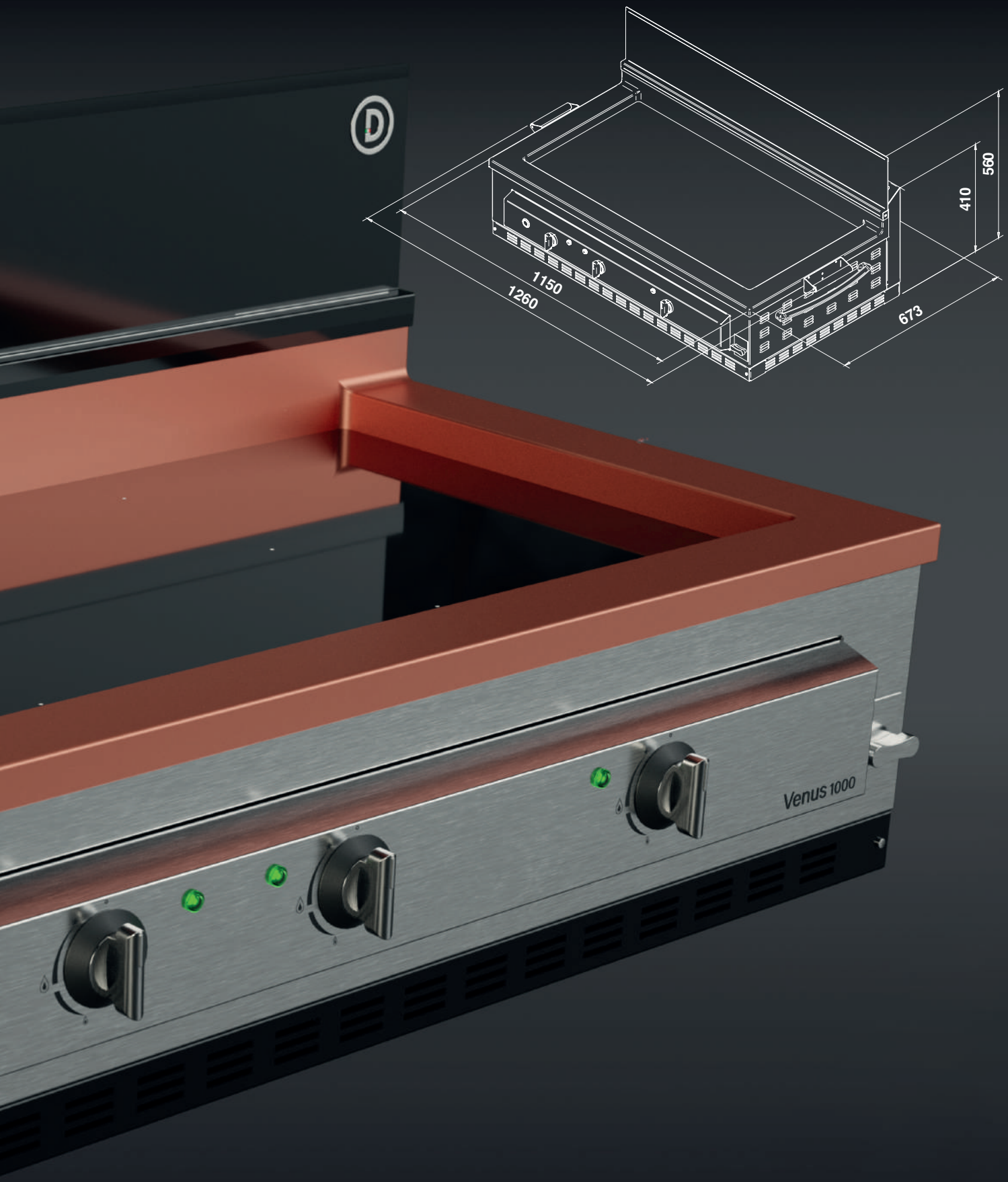

GAS VERSION

VENUS 700

2 independent cooking zone
2 independent burner units of 7.6 kW each
TOT 15.2 KW at full power
W. 93 D. 75 H. 42 // W. 83 (without side handles)
66 kg approx.

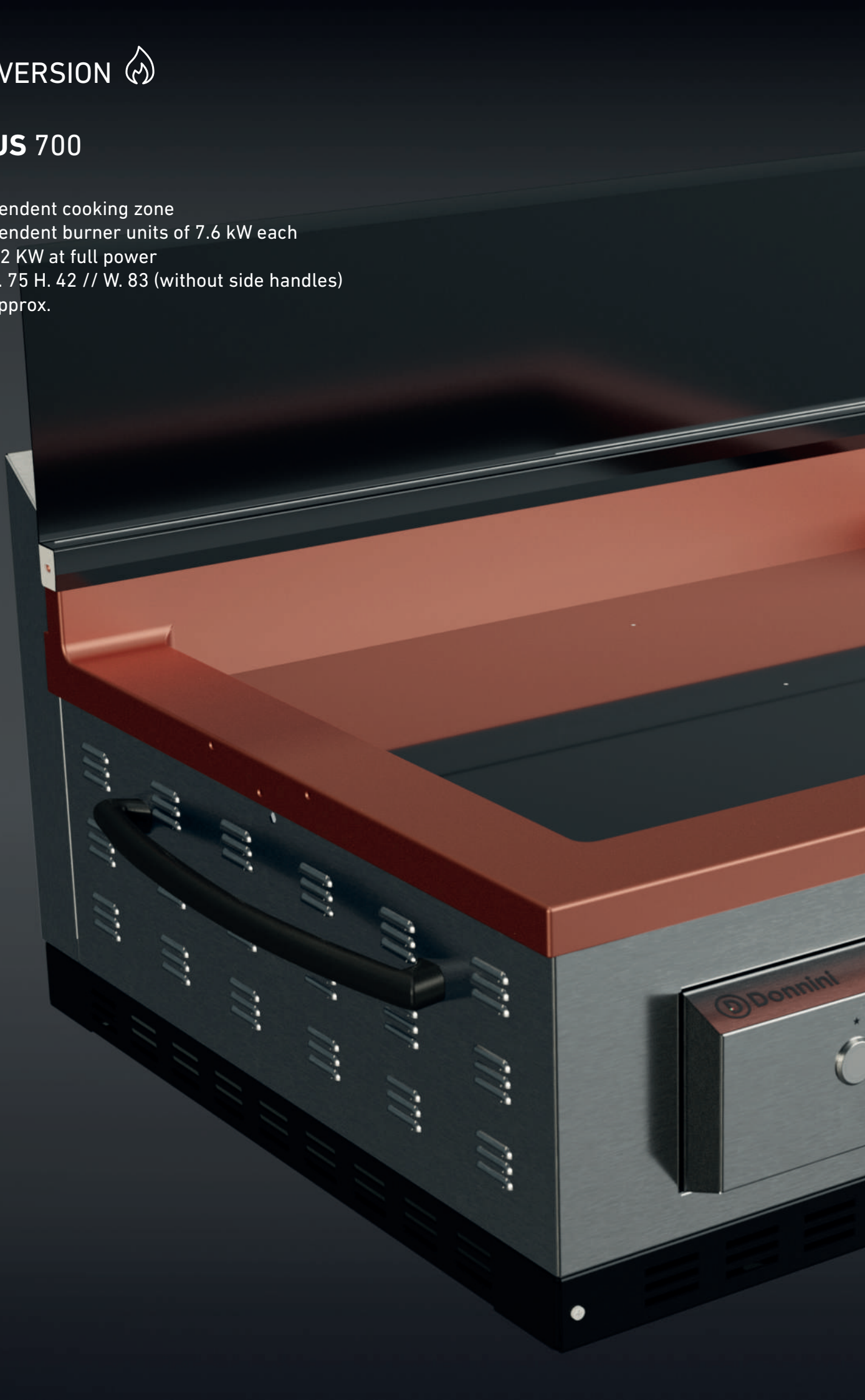

dimensions in millimeters

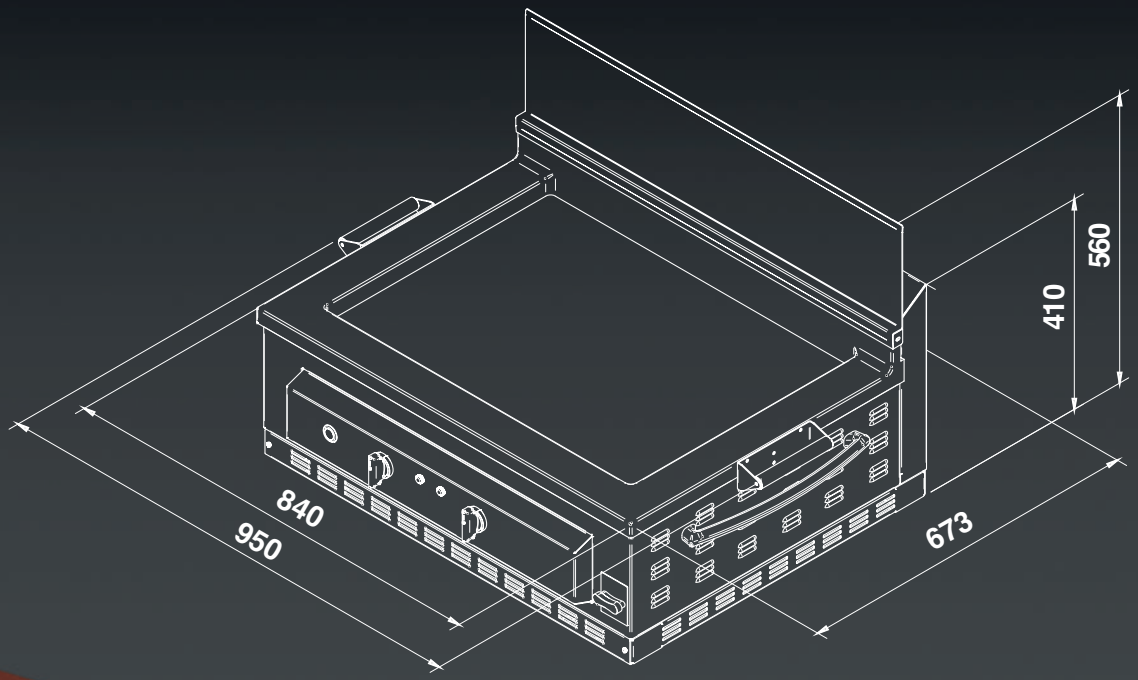

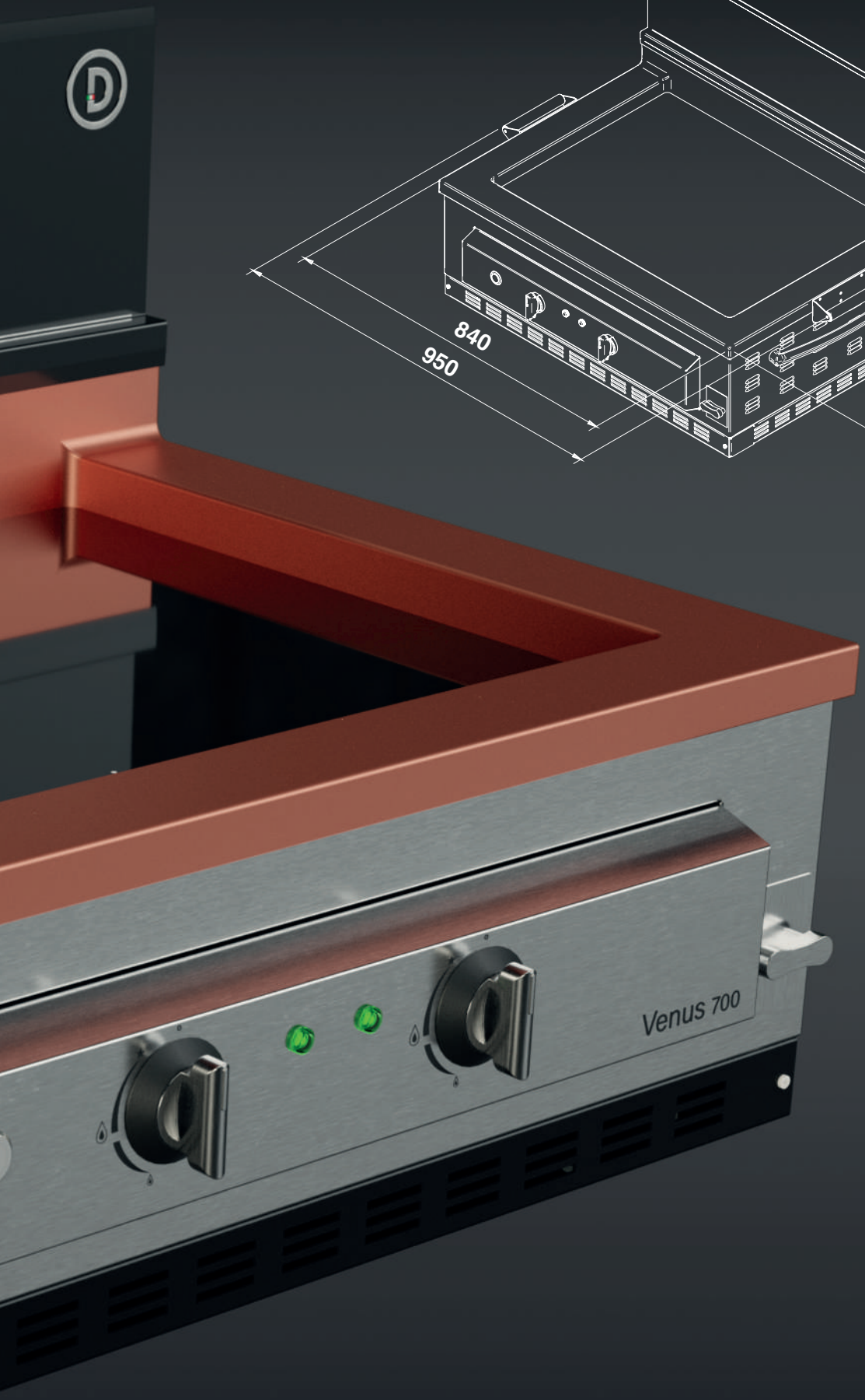

ELECTRIC VERSION

VENUS 1000

3 independent cooking zone
3 independent heating elements of 6.6 kW each
TOT 19.8 KW at full power
W. 124 D. 75 H. 42 // W. 114 (without side handles)
108 kg approx.

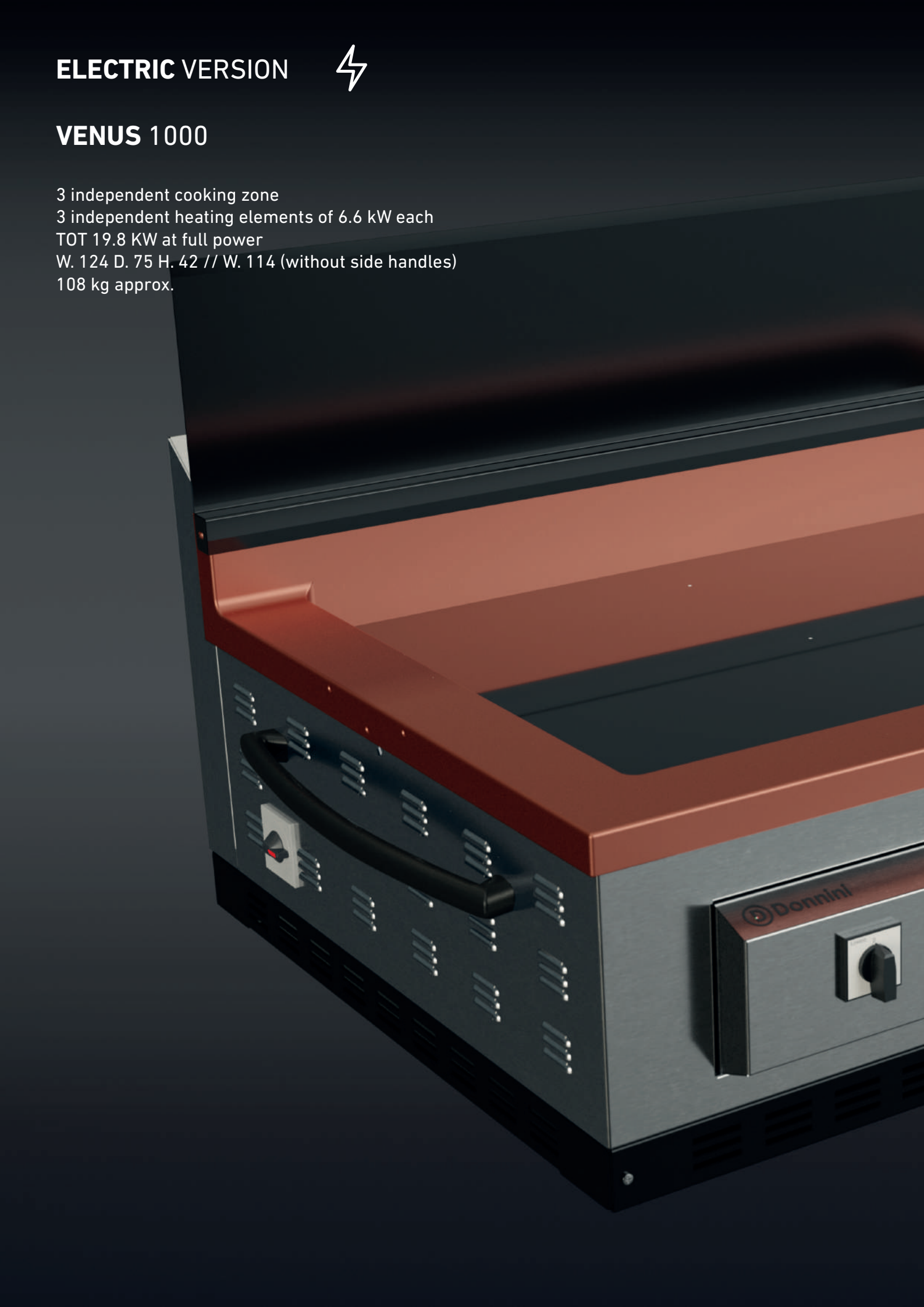

dimensions in millimeters

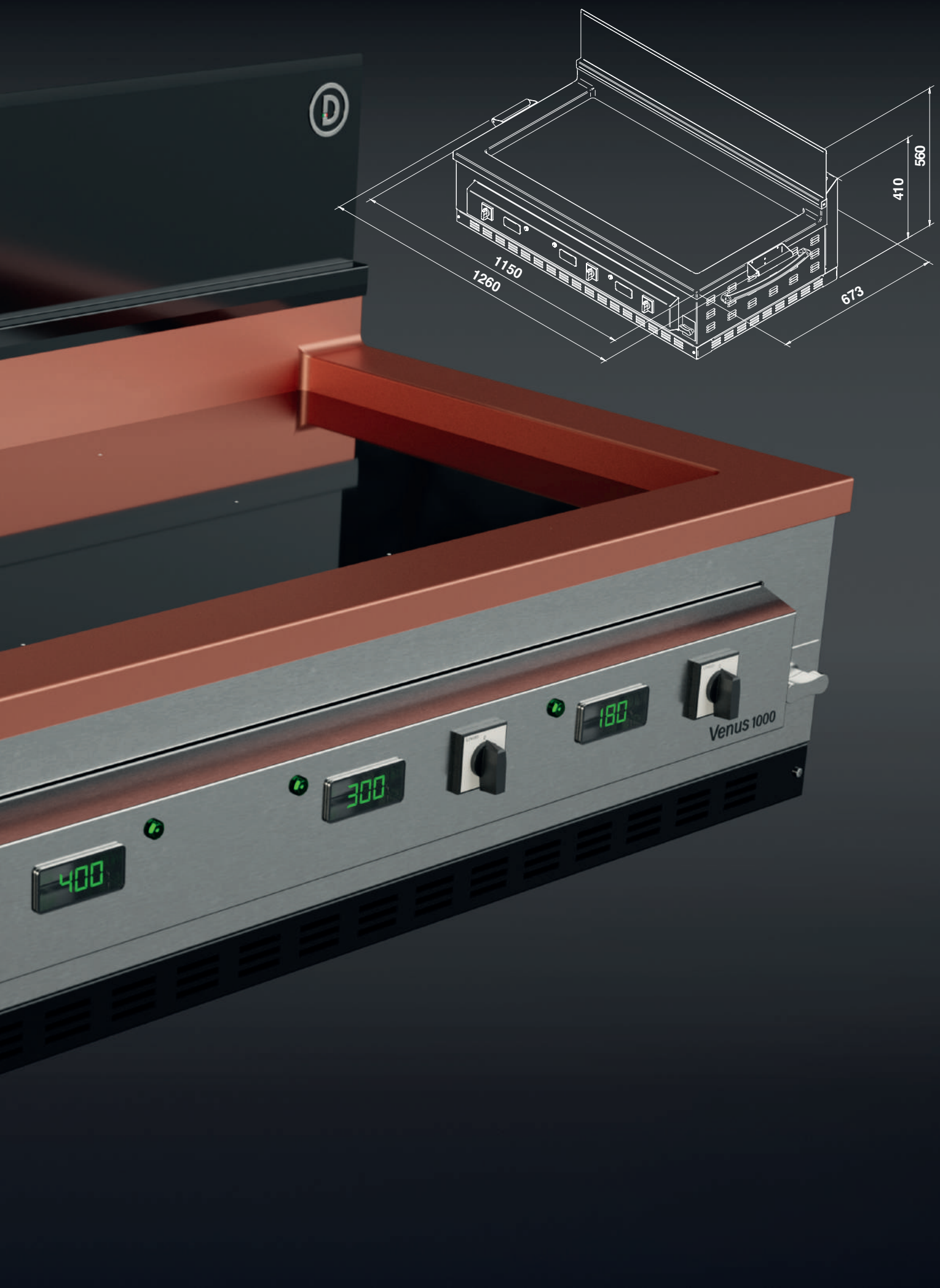

ELECTRIC VERSION

VENUS 700

2 independent cooking zone
2 independent heating elements of 6.6 kW each
TOT 13.2 KW at full power
W. 93 D. 75 H. 42 // W. 83 (without side handles)
80 kg approx.

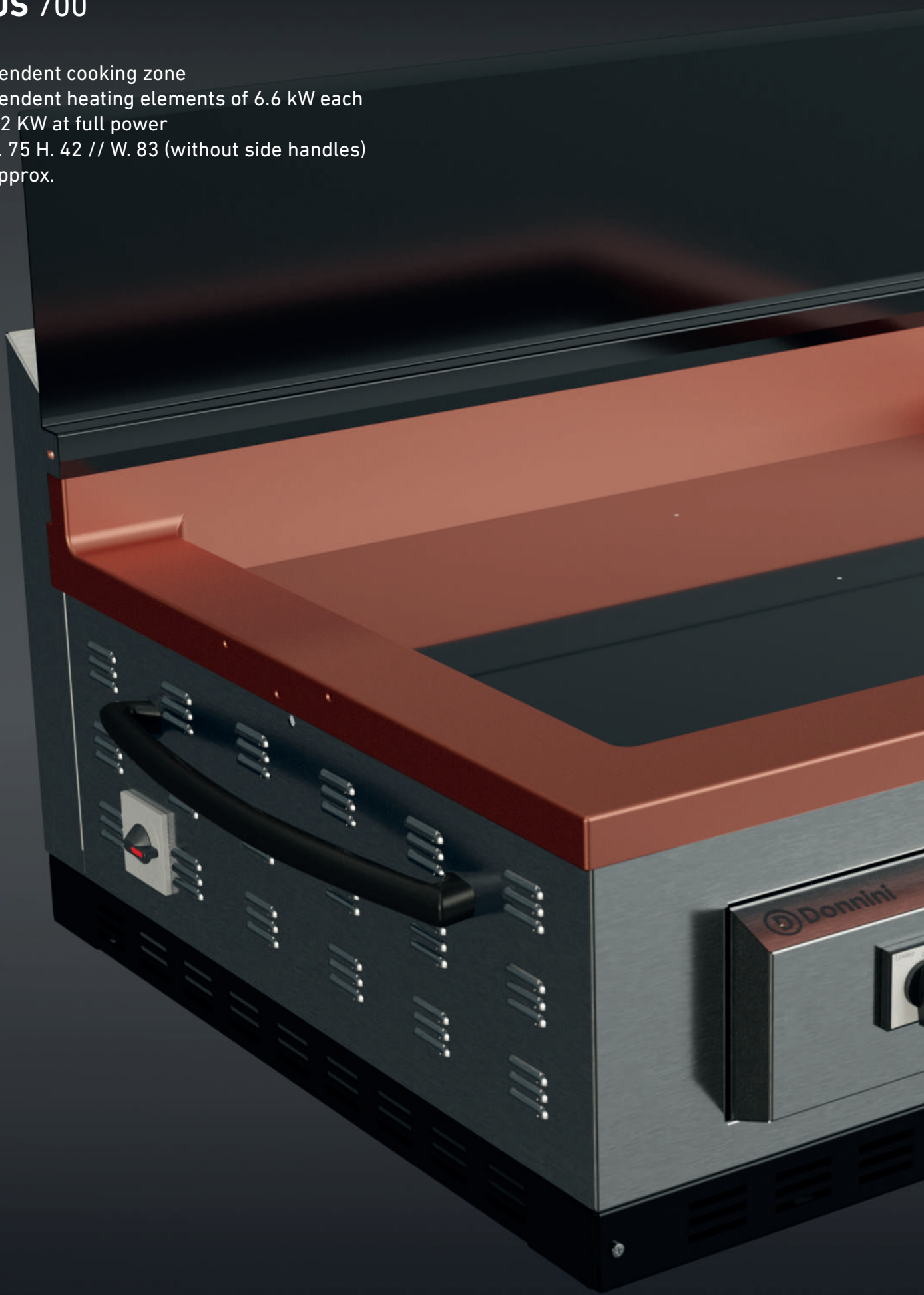

dimensions in millimeters

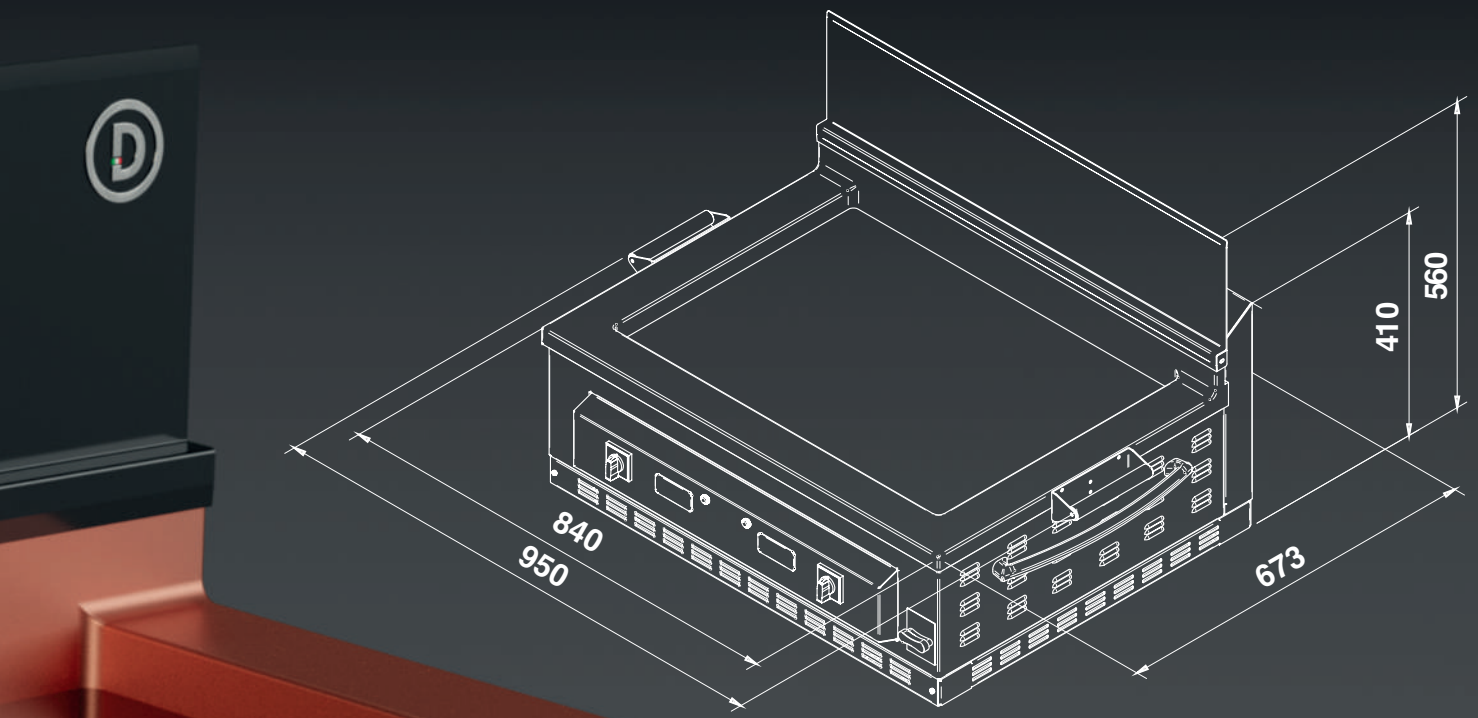

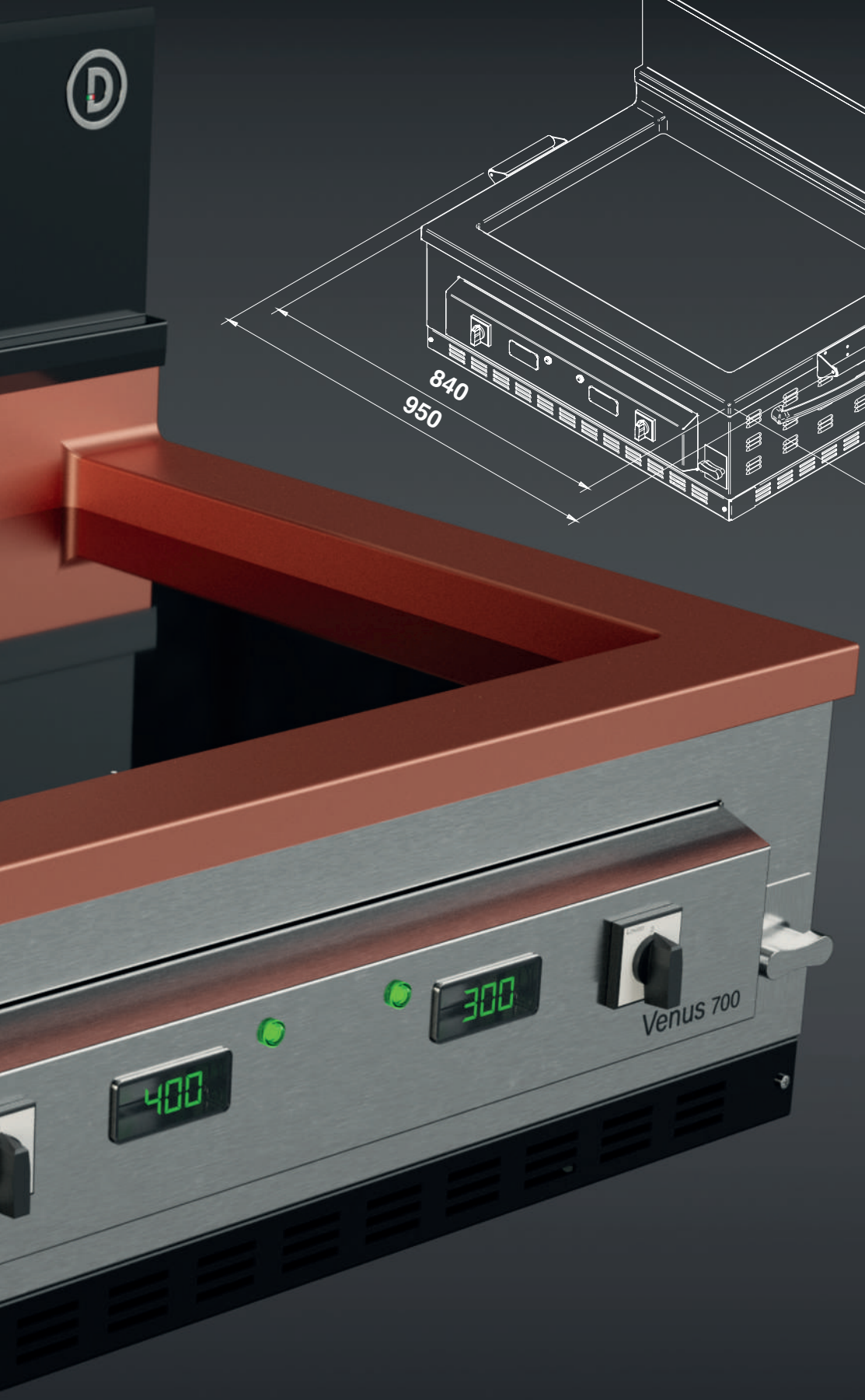

SPECIFICATIONS

GLASS CERAMIC

Glass ceramic is approved and certified as the best material for safeguarding foods during cooking, since it does not allow them to stick and does not emit residues of any kind.
Venus is therefore your passport to healthy cooking.
It also guarantees impeccable hygiene, since it can be washed with soap and an ordinary dishcloth or a wet paper towel.

CONTROL PANEL

The Venus Gas control knob provides constant temperatures of about 50°/400°, reached in very few minutes, while Venus Electric Touch features a power touch screen control, also for temperature settings of about 50°/400° circa.

EQUIPMENT

On the right, Venus has a drainage Runnel which conveys cooking fats into a special channel leading to the removable drawer in the base.
The side carrier handles are in Bakelite to protect against burns.

CHARACTERISTICS COMMON TO ALL MODELS

Structure in 304 stainless steel with FCM authorisation
Glass support frame in Aluminium with Teflon coating with FCM authorisation
Glass ceramic cooking surface

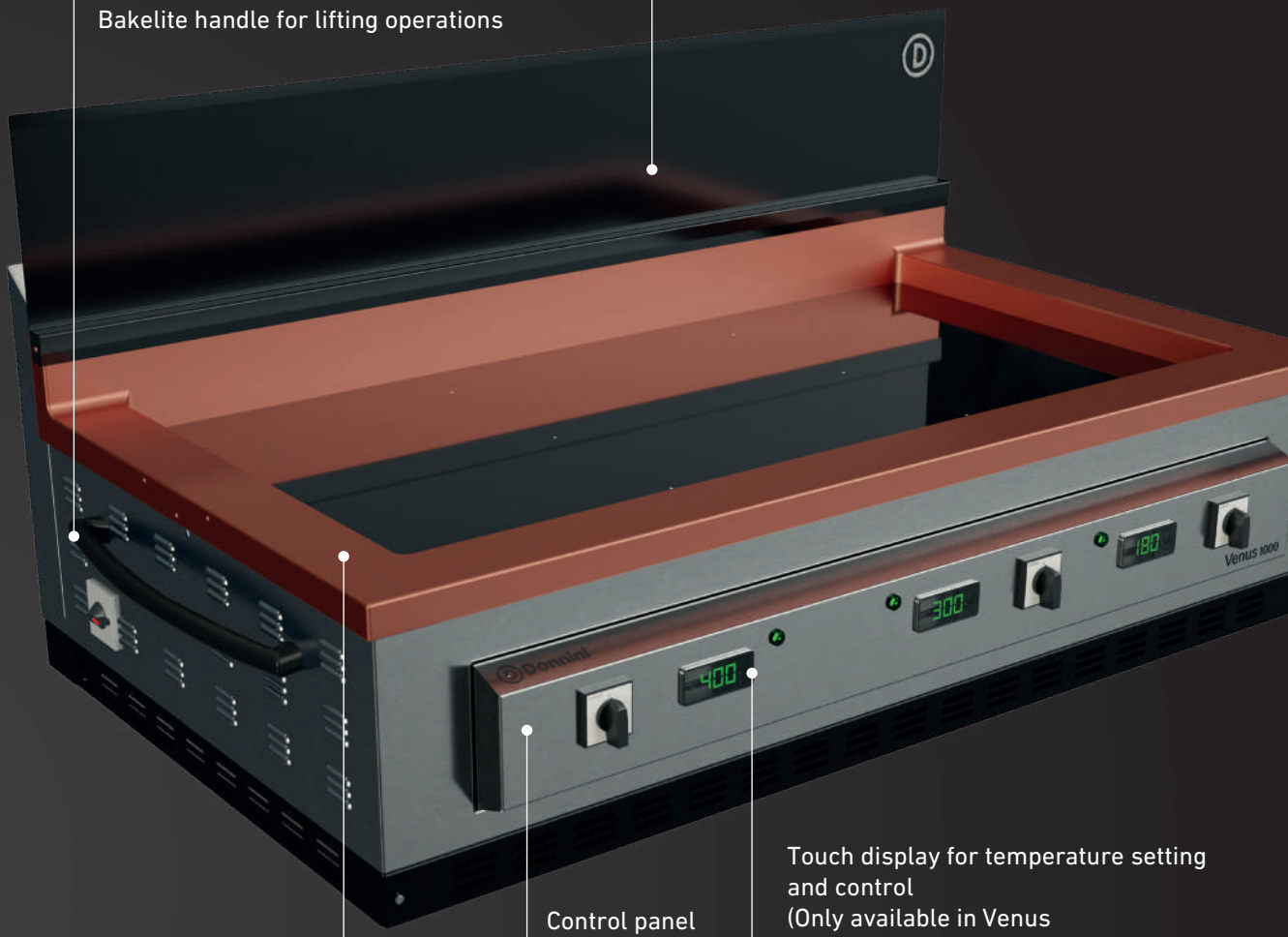

Fat drainage runnel

Glass ceramic cooking surface
SCHOTT CERAN® professional 6 mm

Wheel with brake

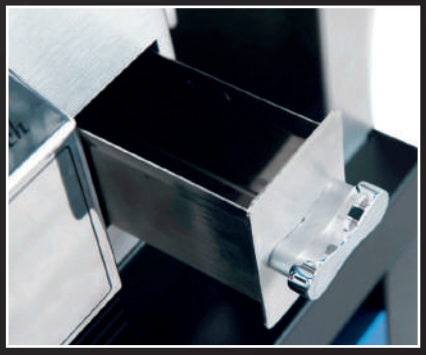

Removable, cleanable drawer
for residual oil and fat

OPTION OF HEATING 3 GLASS CERAMIC TOP ZONES TO DIFFERENT TEMPERATURES

OPTION OF HEATING ENTIRE GLASS CERAMIC TOP TO THE SAME UNIFORM TEMPERATURE

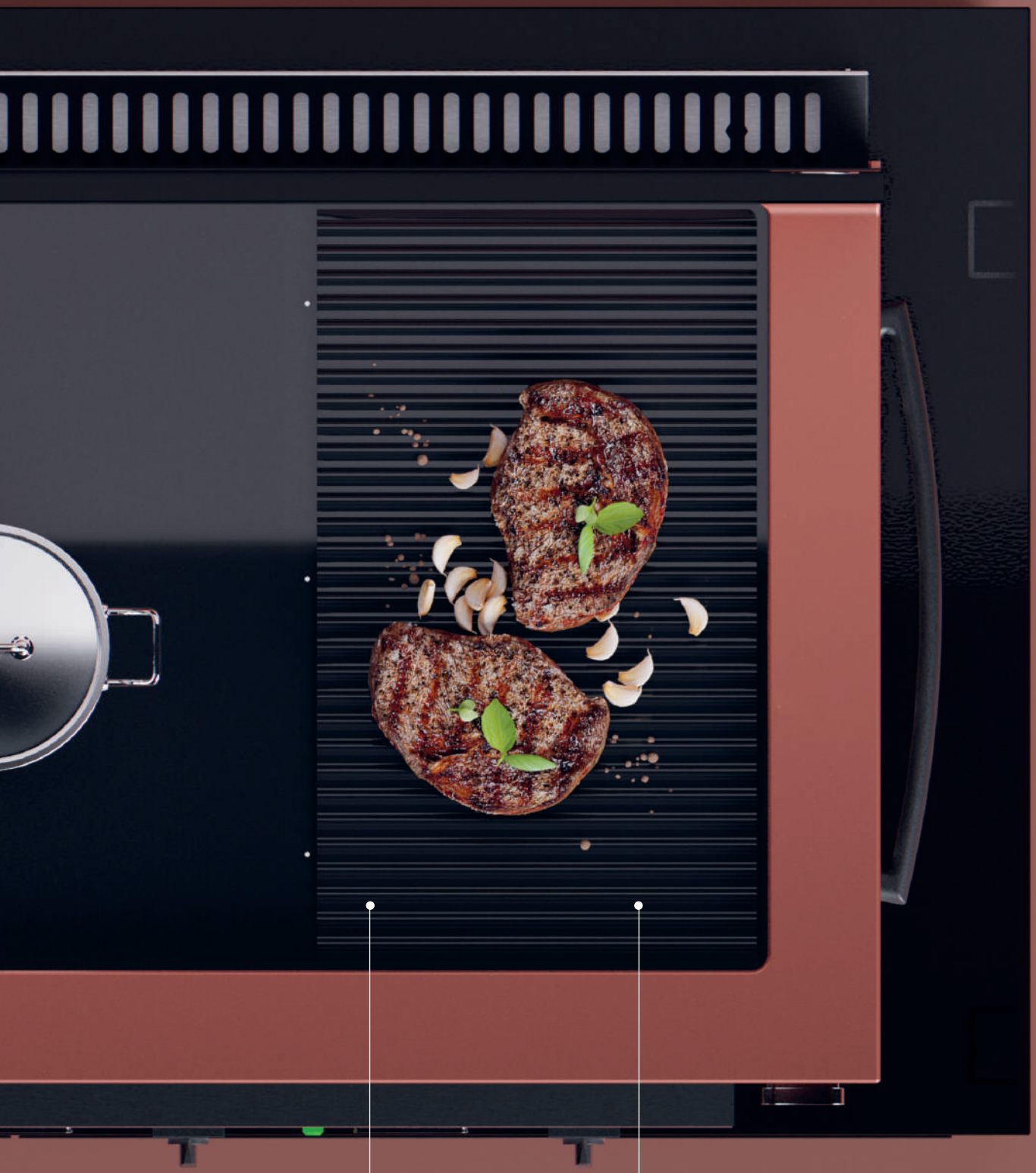

400°

Removable ribbed pad for
grilling on ceramic glass surface

ACCESSORIES

Custom baking pan in 304 stainless steel to be used for soups and stews.

Available for Venus 2 and Venus 3, in sizes:
90x45x14 cm
60x45x14 cm

Removable ribbed pad
for grilling on ceramic glass surface

DIMENSIONS OF WHEELED STAND
H 605 mm / W 1350 mm / D 750 mm

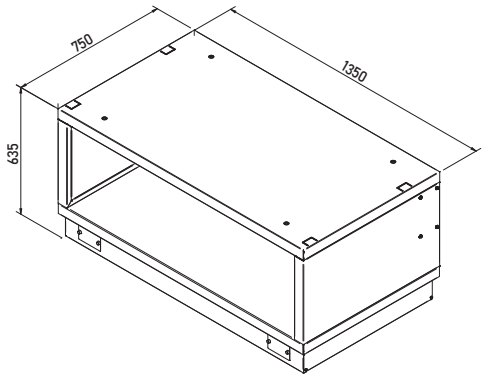

DIMENSIONS OF WHEEL MASKING PLINTH FOR WHEELED STAND
H 105 mm / W 710 mm / D 1310 mm

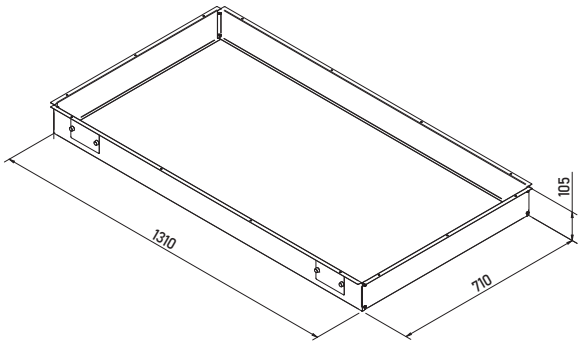

DIMENSIONS OF DOUBLE DRAWER UNIT FOR WHEELED STAND
H 398 mm / W 624 mm / D 717 mm

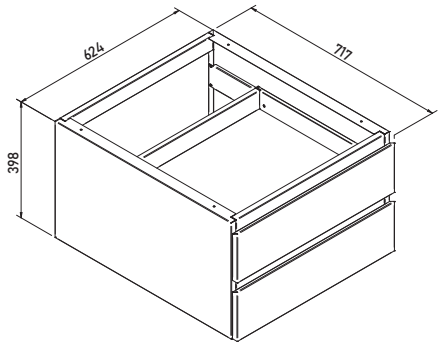

DIMENSIONS OF LARGE SINGLE DRAWER UNIT FOR WHEELED STAND
H 398 mm / W 624 mm / D 717 mm

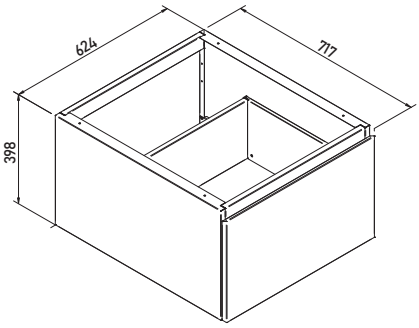

HOOD DIMENSIONS
H 400 mm / W 480 mm / D 1200 mm

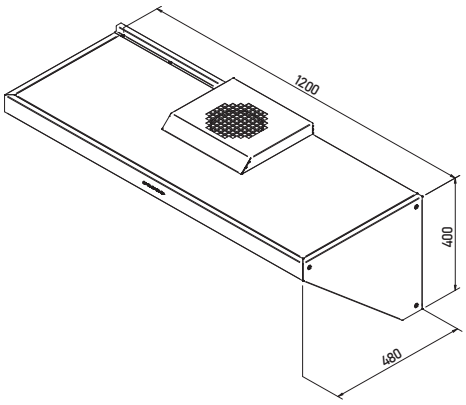

DIMENSIONS OF REAR SERVICE SHELF OF HOOD KIT
H 40 mm / W 1198 mm / D 250 mm

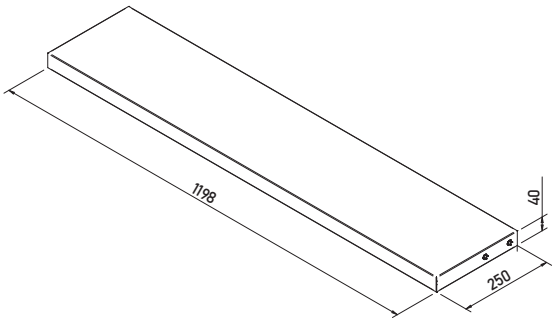

DIMENSIONS OF HOOD KIT COMPLETE WITH UPRIGHTS FOR MOUNTING ON WHEELED STAND
H 1540 mm / W 1358 mm / D 649 mm

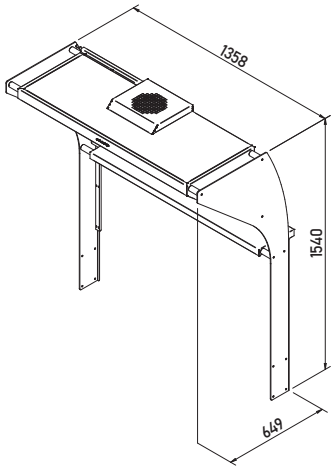

DIMENSIONS OF SET OF RETAINER EDGES FOR SIDE SHELVES OF WHEELED STAND
H 113 mm / W 398 mm / D 575 mm

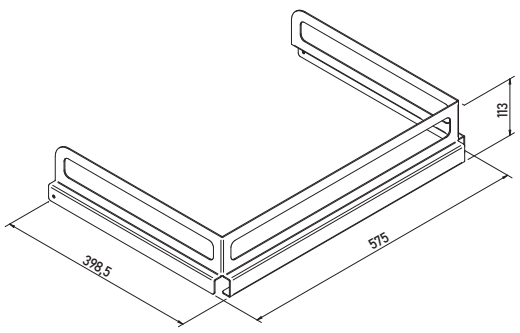

DIMENSIONS OF SERVICE SHELF FOR WHEELED STAND
H 536 mm / W 570 mm / D 475 mm

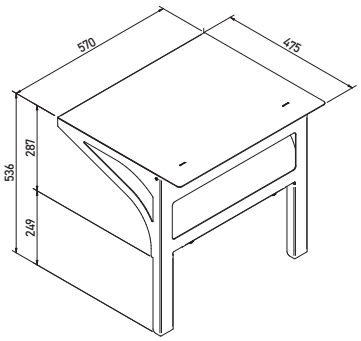

SET OF CARBON FILTERS
H 351 mm / W 351 mm / D 450 mm

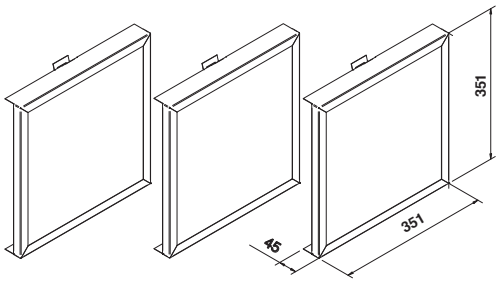

UNIT COMPLETE WITH ACCESSORIES

EXTRACTOR HOOD CHARACTERISTICS

Controls: backlit with 3 speeds + 1 timed booster
Version: extractor
Filtering optional: with active charcoal filters
Finish: painted steel
Noise range dB(A): 41-53
Max flow rate in booster mode, 1 motor version: 890 m3/h
Lighting: LED spotlights, 3x2.1 W
Power supply: 220-240V / 50-60Hz
Power drawdown: 326.3 W

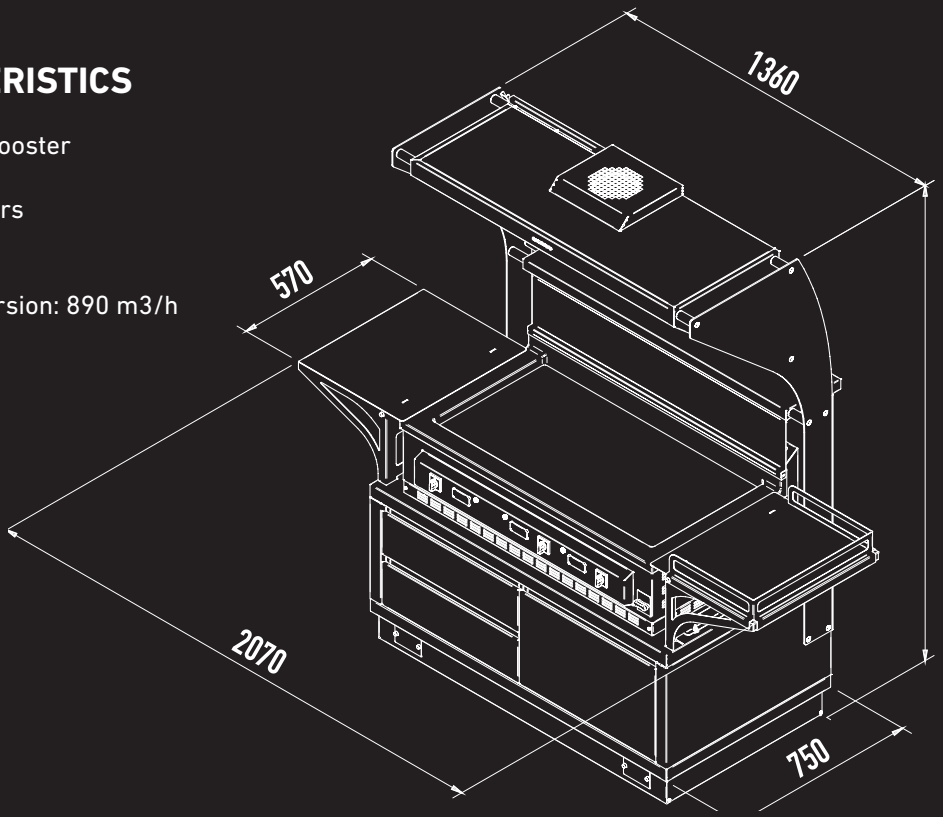

MAXIMUM OVERALL DIMENSIONS
H 560 mm / W 1260 mm / D 673 mm

HOOD KIT

At present, the hood kit in the catalogue is only available for professional outdoor use.

Combined FA+C filter (FA baffle + carbon)

Characteristics

- Constructed in AISI 304 Stainless Steel throughout
- Suitable for use in industrial kitchens
- High grease filtration efficiency
- High particle and VOC absorption efficiency, neutralising unpleasant smells
- Baffle filter 25 mm thick
- Active carbon filter 20 mm thick
- Easily removable baffle filter
- Baffle filter washable in dishwasher at high temperature
- Carbon filter lid easily removed for carbon replacement

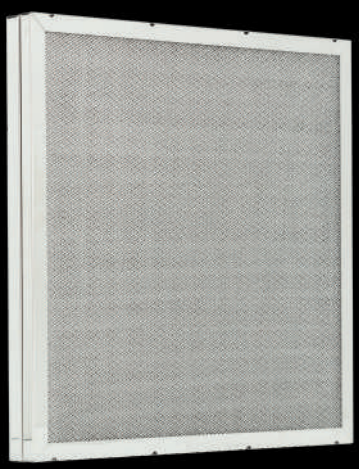

Active carbon filters should be changed every 3 months in professional and every 6 months in domestic use, and in all cases when they are no longer trapping smells.

Donnini
400
300

VENUS 1000 DELUXE COPPER

The Deluxe version has structure in food-approved AISI 304 stainless steel throughout. With copper-plated finish, Venus is also an exclusive, sumptuous interior design item, while retaining all the functional features of the professional version.
A study by the Institute of Virology at Pisa University, Italy has certified that copper is able to reduce the viral load of Sarscov-2 within 10 minutes, and to neutralise the virus completely within one hour.

Donnini
400
300

VENUS 1000 DELUXE GOLD

The Deluxe version has structure in food-approved AISI 304 stainless steel throughout. With gold-plated finish, Venus is also an exclusive, sumptuous interior design item, while retaining all the functional features of the professional version.

Donnini
400
300

VENUS 1000 PROFESSIONAL

The professional version has structure in food-approved 304 stainless steel throughout, with Scotch Brite finish.

CLEANING THE VENUS STAINLESS STEEL AND ALUMINIUM COMPONENTS

Cleaning specifications for all stainless steel parts: use a damp cotton or microfibre cloth, with a specific product or cleaner for stainless steel if necessary Do not use: abrasive sponges which might scratch the steel, or abrasive cleaners. Cleaning specifications for glass ceramic cooking surface support frame (aluminium): use a damp cotton or microfibre cloth with a little washing-up liquid and hot water if necessary. Then dry thoroughly with a dry cloth.

CLEANING THE GLASS CERAMIC SURFACE

Wash with synthetic sponges (such as Scotchbrite), cotton or microfibre cloths, kitchen roll, or specific products for glass ceramic surfaces. Use washing-up liquid diluted in hot water. After this, before use rinse with vinegar or vinegar and lemon to remove grease. It is best to clean when the ceramic glass plate is not completely cold, so that any spilt foods or burnt fats can be removed with an ordinary scraper, to prevent deterioration of the surface. After cleaning, rinse with water and dry thoroughly.

Cleaning specifications for residual oil and fat box:
remove, empty and rinse with hot water and washing-up liquid.

NB

Water jets must not be directed straight at the appliance.

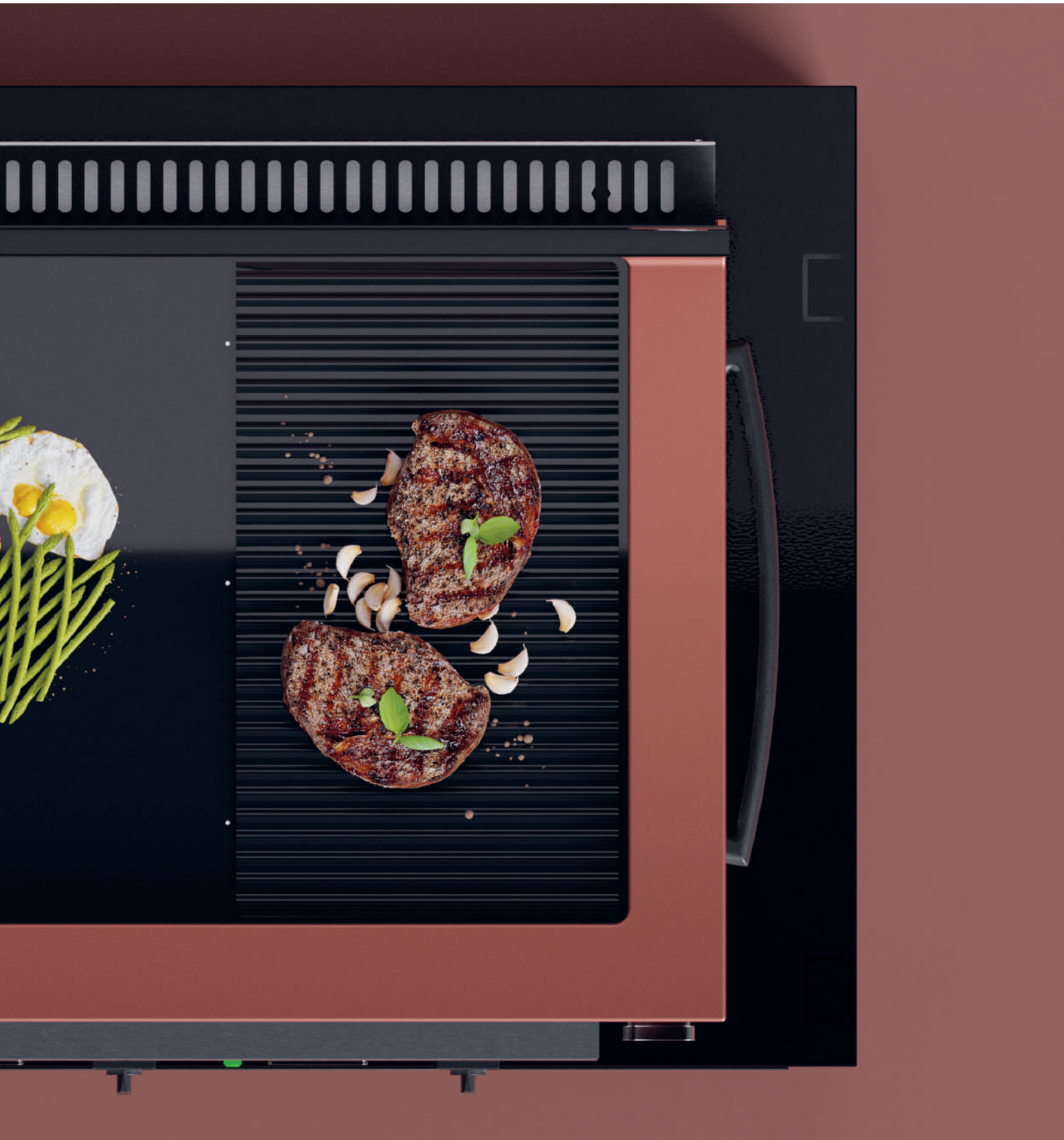

Donnini
400

ILLUSTRATIONS IN THIS CATALOGUE/ON THIS WEBSITE ARE PURELY GUIDELINE AND MAY DIFFER FROM THE ORIGINAL PRODUCT

Donnini

MADE IN ITALY

DONNINI S.R.L.
Via La Villa n. 30 – Loc. Ghilardino
61034 Fossombrone (PU)
Tel. 0721 728246
www.donninisrl.com
info@donninisrl.com

Denis Donnini | Sales Manager
+39 379 123 4612